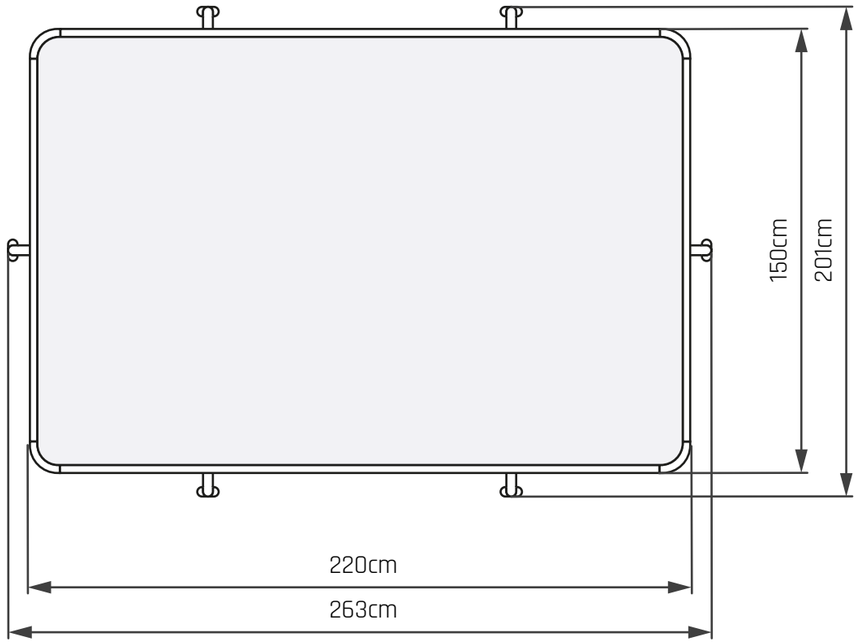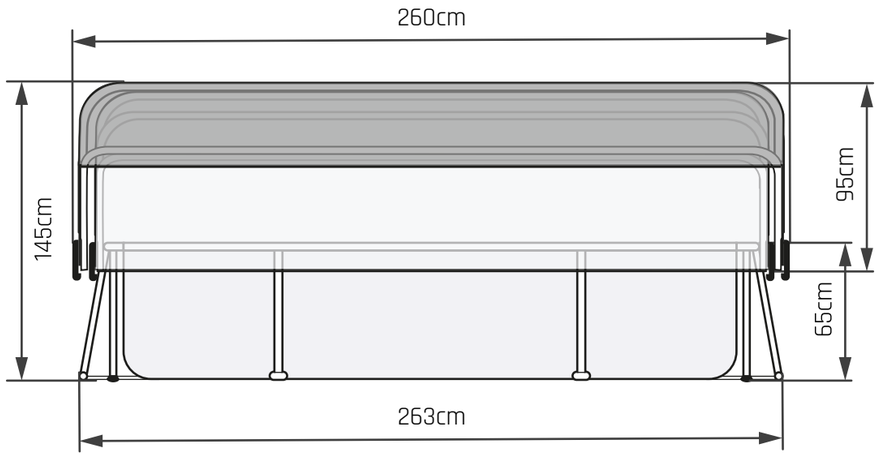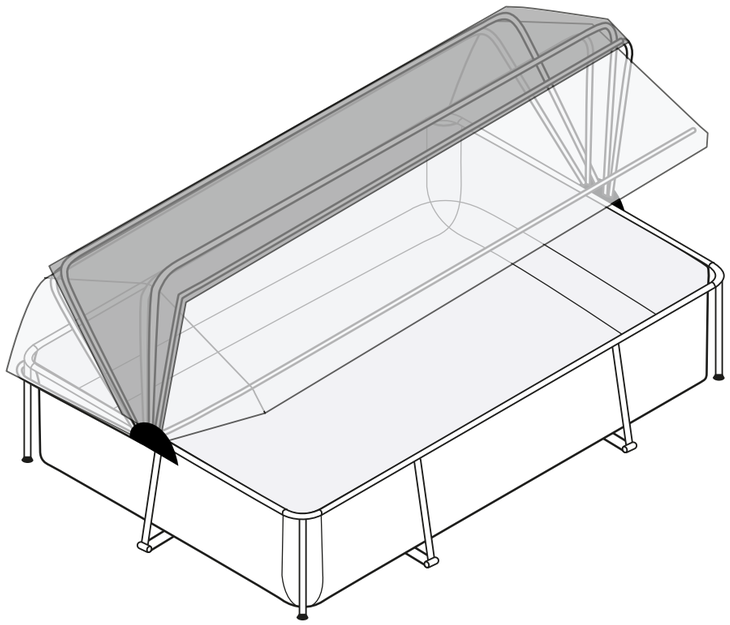EXIT swimming pool with dome & canopy