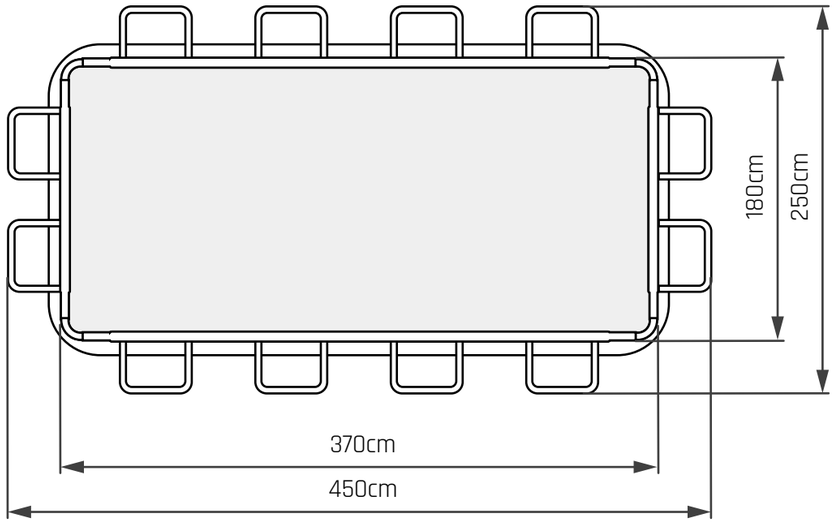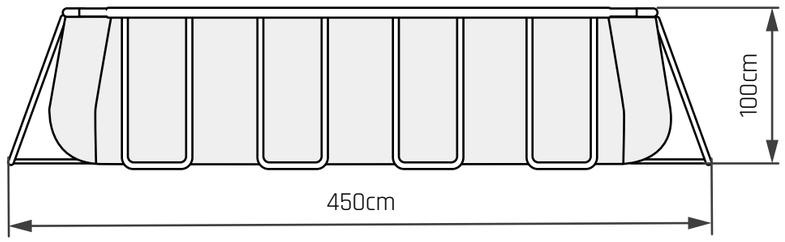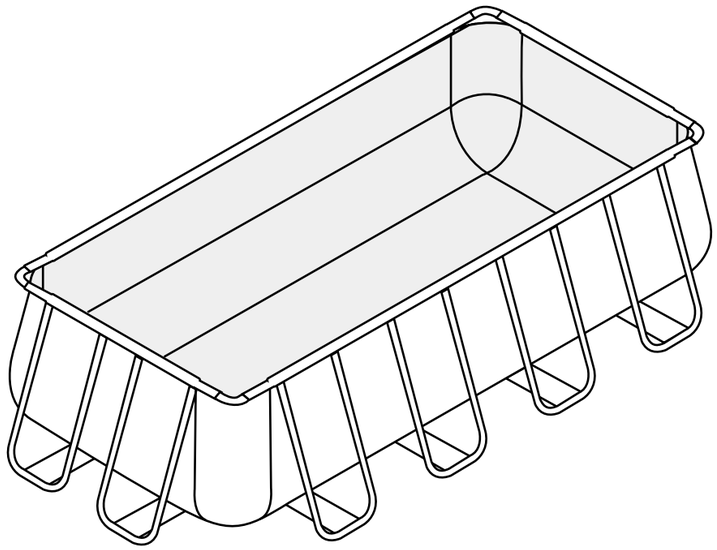EXIT swimming pool